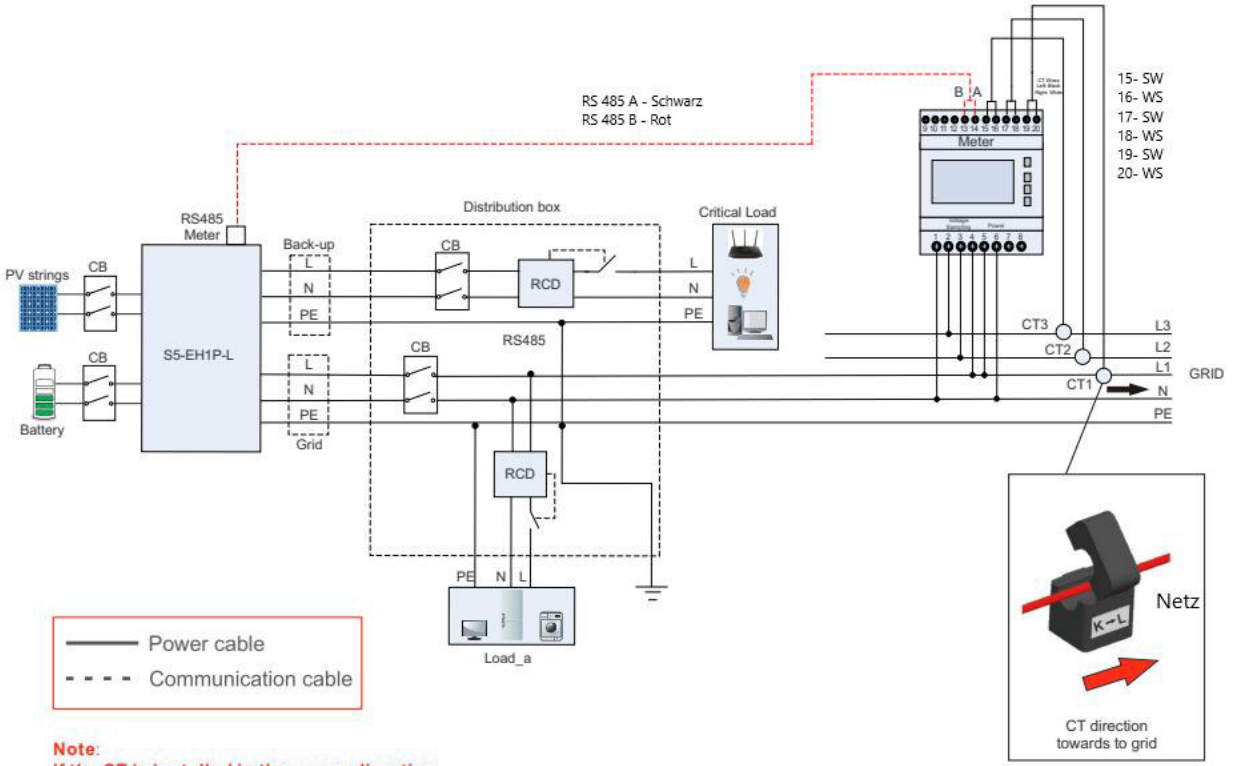

Note:
If the CT is installed in the wrong direction, the Hybrid Inverter can't work normally.

Figure 4.40 (Eastron SDM630MCT)